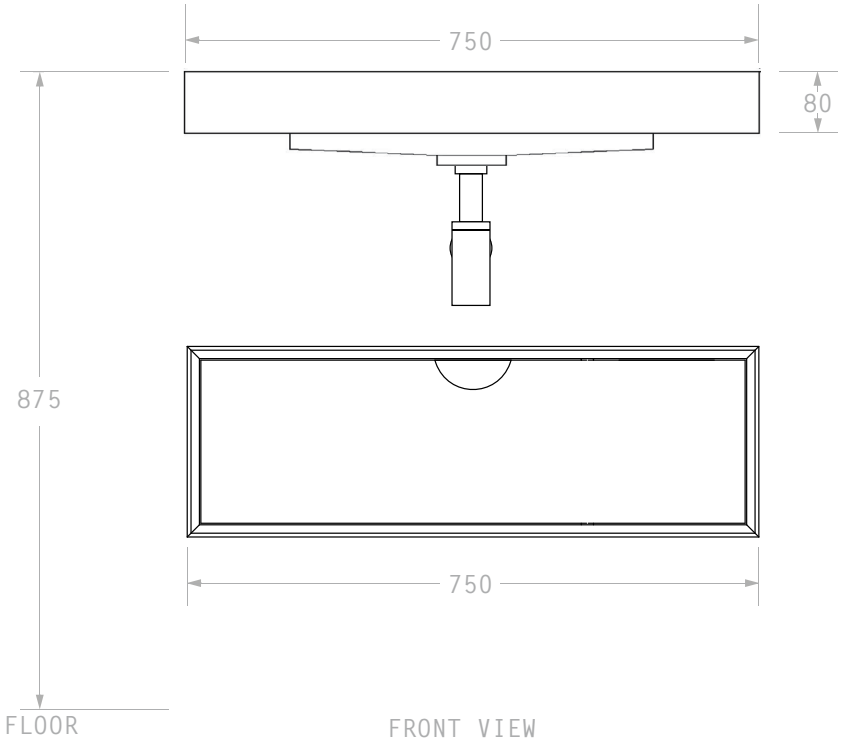

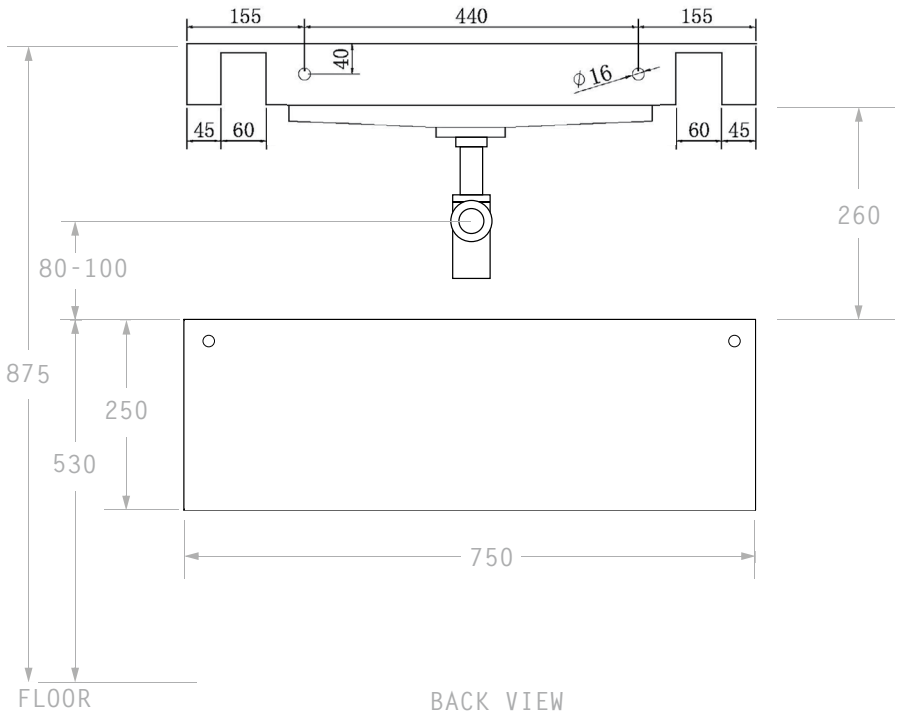

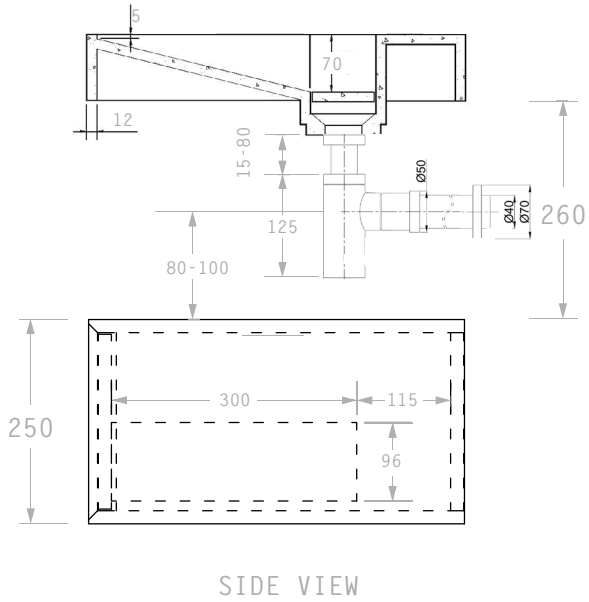

otti australia

PRODUCT	MOONLIGHT BASIN / MOONLIGHT CABINET		NOTES:
CODE	SSTML750	ML750W	RECOMMENDED ROUGH IN SPECS FOR PLUMBER BASED ON INSTALLED BENCH HEIGHT WITH INSPIRE BATHWARE BOTTLE TRAPS.
DIMENSIONS	750X460X80	750X460X250	
CONFIGURATION	WALL HUNG		ALL DIMENSIONS MEET STANDARDS.
DATE	03/06/2021		PLEASE DO NOT DRILL OR ROUGH IN UNTIL YOU HAVE RECEIVED ALL YOUR COMPONENTS.