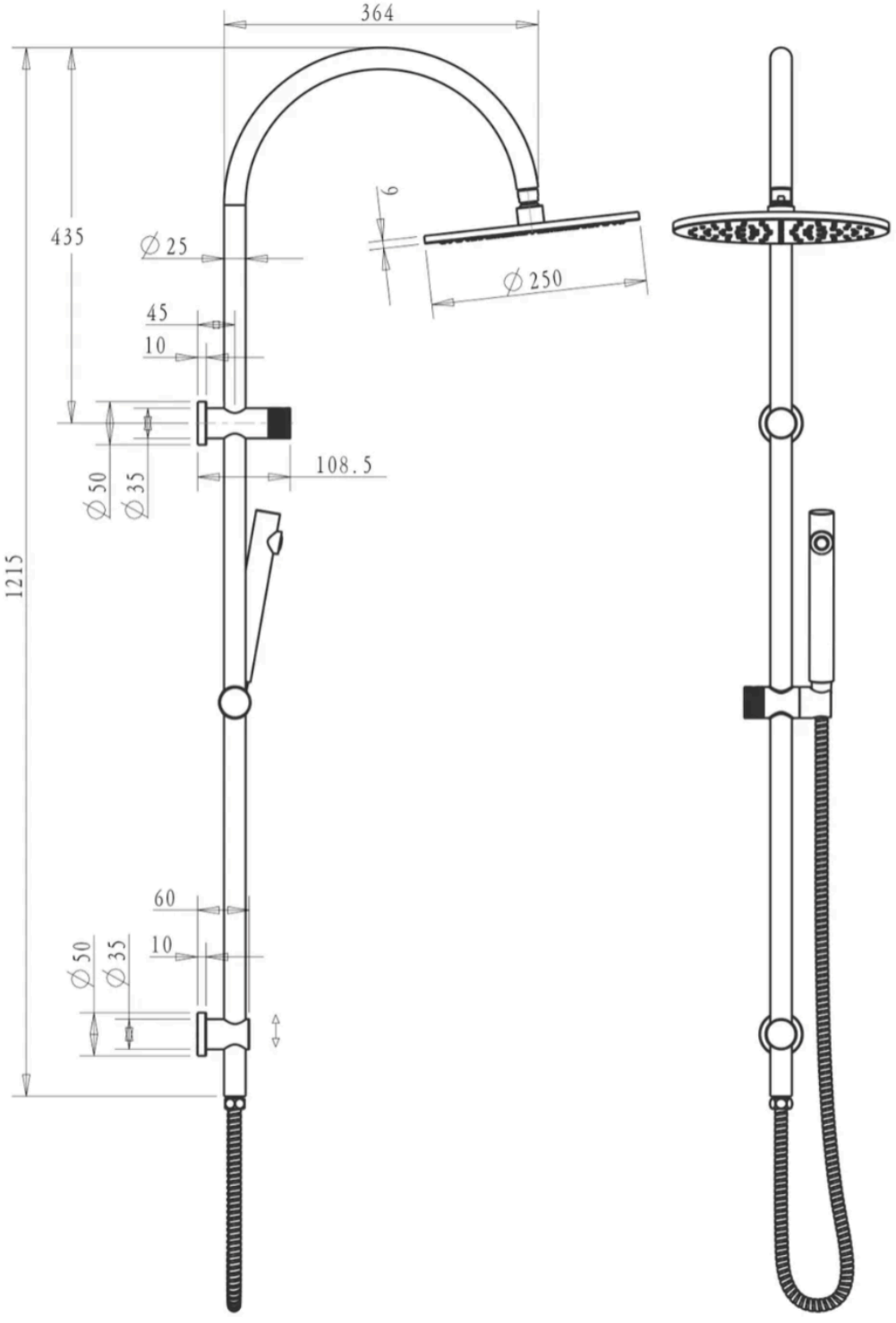
364
435
1215
∅25
45
10
∅50
∅35
108.5
6
∅250
60
10
∅50
∅35