Ezyflow 40mm Pop-Up Plug & Waste with Overflow

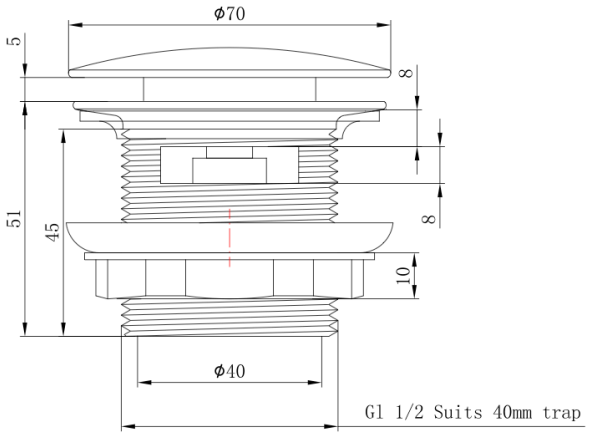

Product Specifications



Code:	EZY-OF40-51-GM
Finish:	Gunmetal
Barcode:	9339897024044
Primary Material:	Standard Brass
Technical Features:	Great for Low Clearance
Special Features:	Spare Parts Available Pull Out Cartridge

EZY-OF40-51-AB
Aged Bronze
PVD

EZY-OF40-51-MB
Matte Black
Powdercoat

EZY-OF40-51-BB
Brushed Brass
PVD

EZY-OF40-51-BN
Brushed Nickel
PVD

EZY-OF40-51-CH
Chrome
Electroplate

EZY-OF40-51-GM
Gunmetal
PVD

Experience, *the difference.*

LINSOL.COM.AU
1300 546 765
info@linsol.com.au
PO Box 88, Coniston NSW 2500

All information is correct at time of writing. The actual product may vary slightly and sizes may be scaled up or down.
Warranty is for domestic use only. For warranty & care information please visit linsol.com.au/warranty